Movexx International B.V.
+31 (0)318 51 99 00
info@movexx.com
movexx.com

TT1000/2000-M dimensions support modell A-D

Model A 343325 | Model B 340917 | Model C 343460 | Model D 343463

Config 1

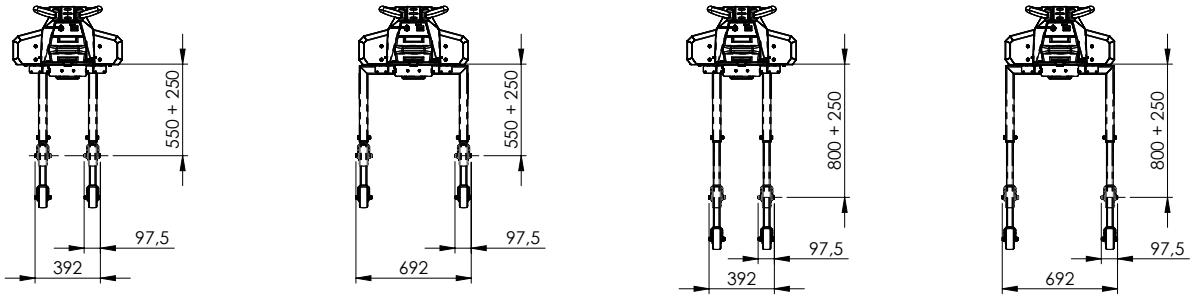

Config 2

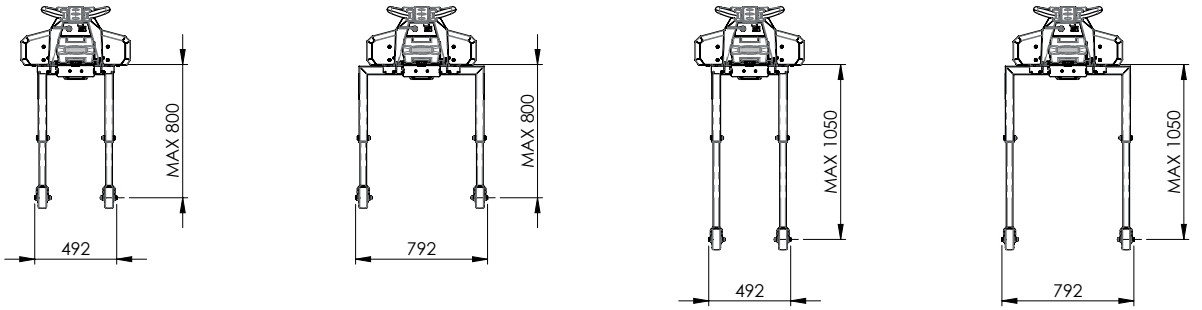

Config 3

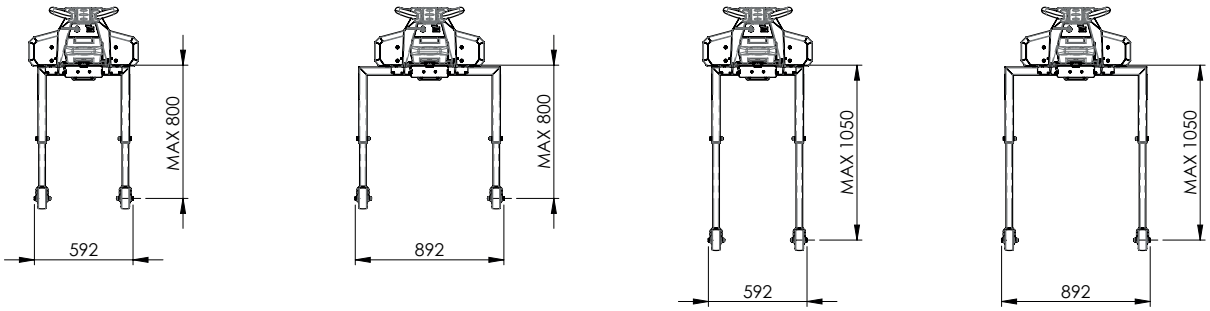

Config 4

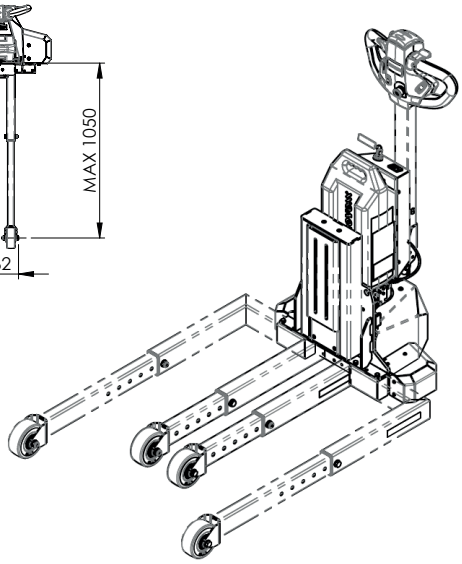

© 2023 Movexx International B.V.

Movexx International B.V.
+31 (0)318 51 99 00
info@movexx.com
movexx.com

TT1000/2000-M dimensions support modell E-H

	Model E 344310	Model F 344358	Model G 344663	Model H 344699
Config 1	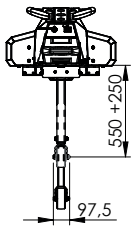	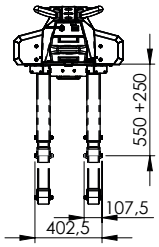	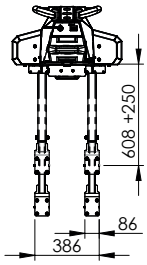	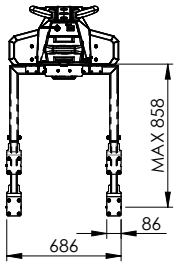
Config 2		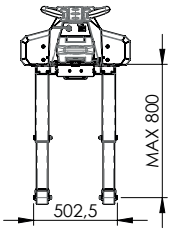	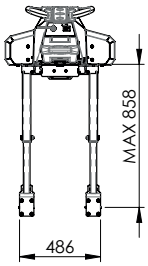	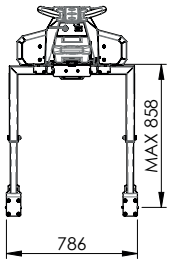
Config 3		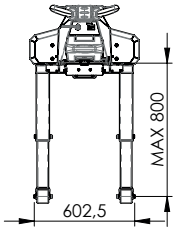	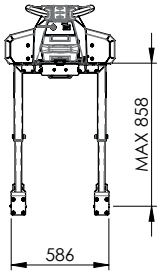	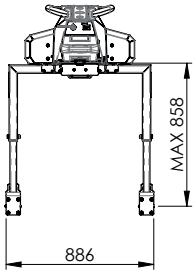
Config 4		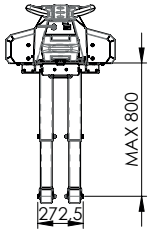	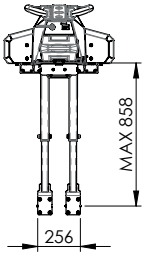	

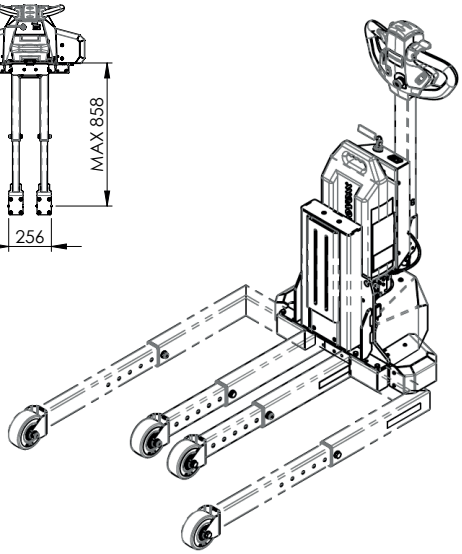

© 2023 Movexx International B.V.